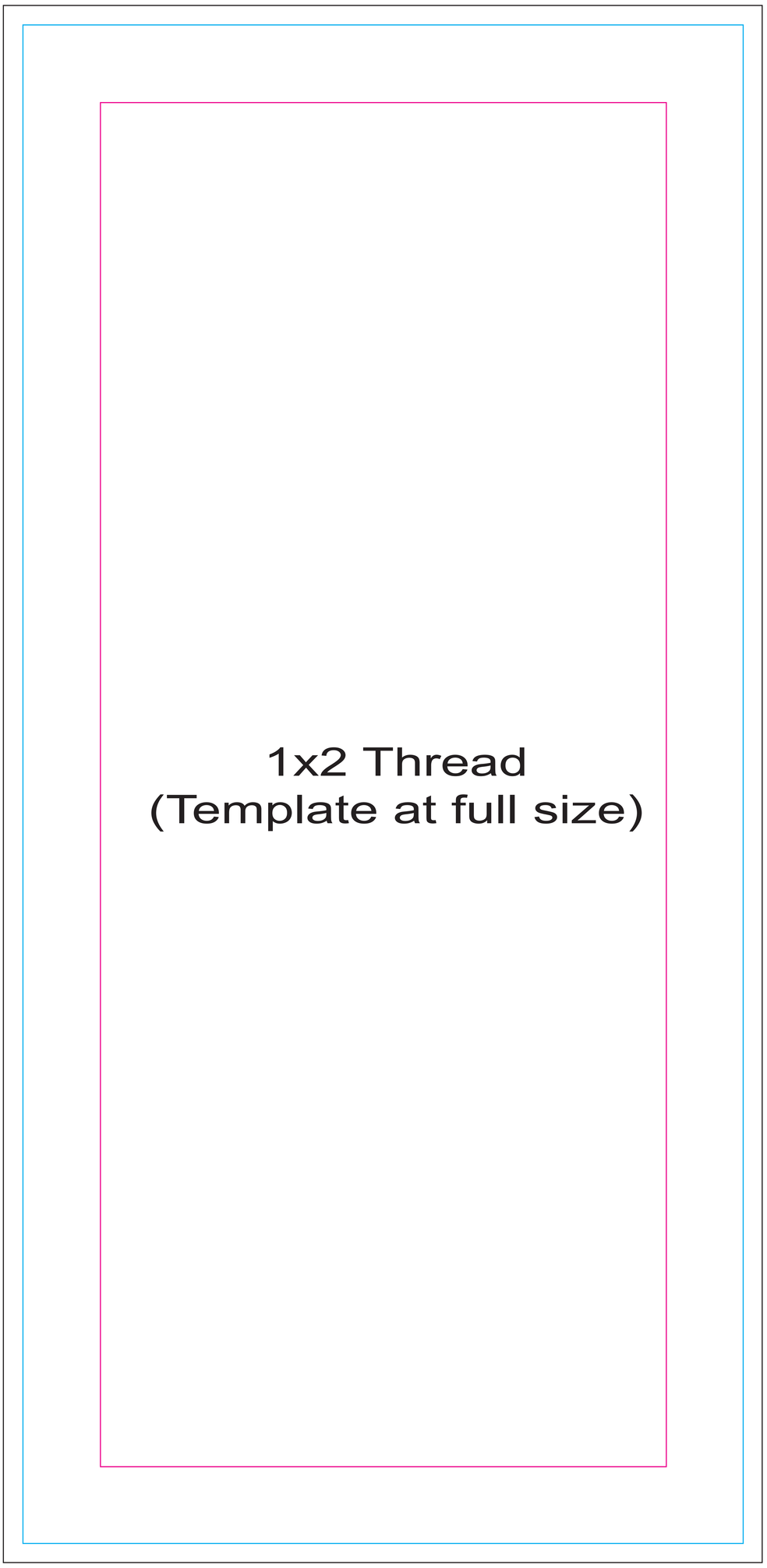

SKIN A

Print Size: 29.5"w x 60.5"h
Final Size: 28"w x 59"h
X-FACTOR (Live Area) Shown: 3" in on all sides

X-FACTOR: 3-5" in on all sides. 3" in allows for moderate amount of distortion, while 5" eliminates distortion almost altogether. If NO distortion is the desired result, please contact your Graphic Support Representative. Consult http://www.visproducts.com for comprehensive file prep and set up guides.

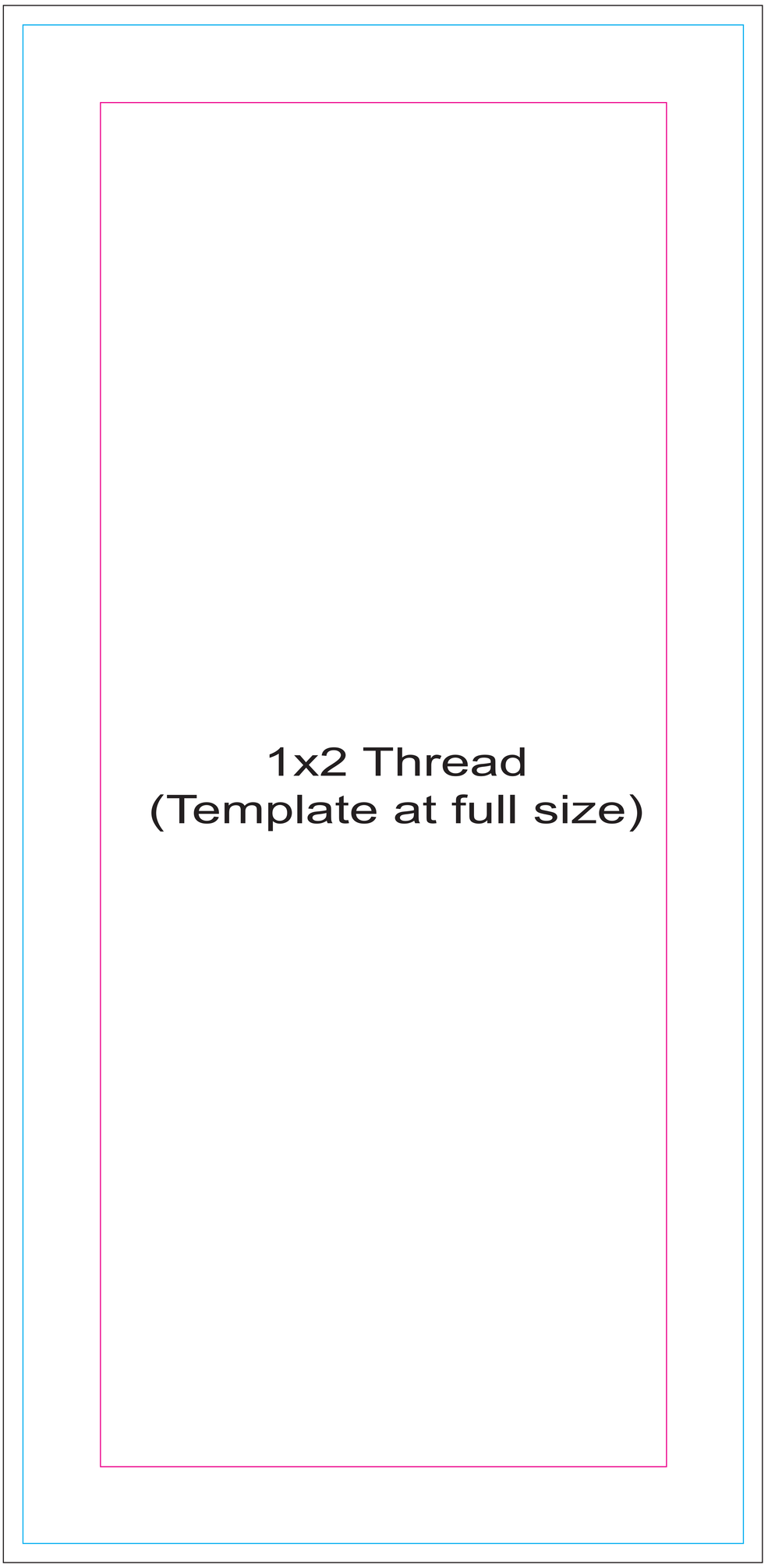

SKIN B

Print Size: 29.5”w x 60.5”h
Final Size: 28”w x 59”h
X-FACTOR (Live Area) Shown: 3” in on all sides

X-FACTOR: 3-5” in on all sides. 3” in allows for moderate amount of distortion, while 5” eliminates distortion almost altogether. If NO distortion is the desired result, please contact your Graphic Support Representative. Consult http://www.visproducts.com for comprehensive file prep and set up guides.

SKIN C

Print Size: 29.5”w x 29.5”h
Final Size: 28”w x 28”h
X-FACTOR (Live Area) Shown: 3” in on all sides

X-FACTOR: 3-5” in on all sides. 3” in allows for moderate amount of distortion, while 5” eliminates distortion almost altogether. If NO distortion is the desired result, please contact your Graphic Support Representative. Consult http://www.visproducts.com for comprehensive file prep and set up guides.

SKIN D

Print Size: 29.5”w x 29.5”h
Final Size: 28”w x 28”h
X-FACTOR (Live Area) Shown: 3” in on all sides

X-FACTOR: 3-5” in on all sides. 3” in allows for moderate amount of distortion, while 5” eliminates distortion almost altogether. If NO distortion is the desired result, please contact your Graphic Support Representative. Consult http://www.visproducts.com for comprehensive file prep and set up guides.

100”

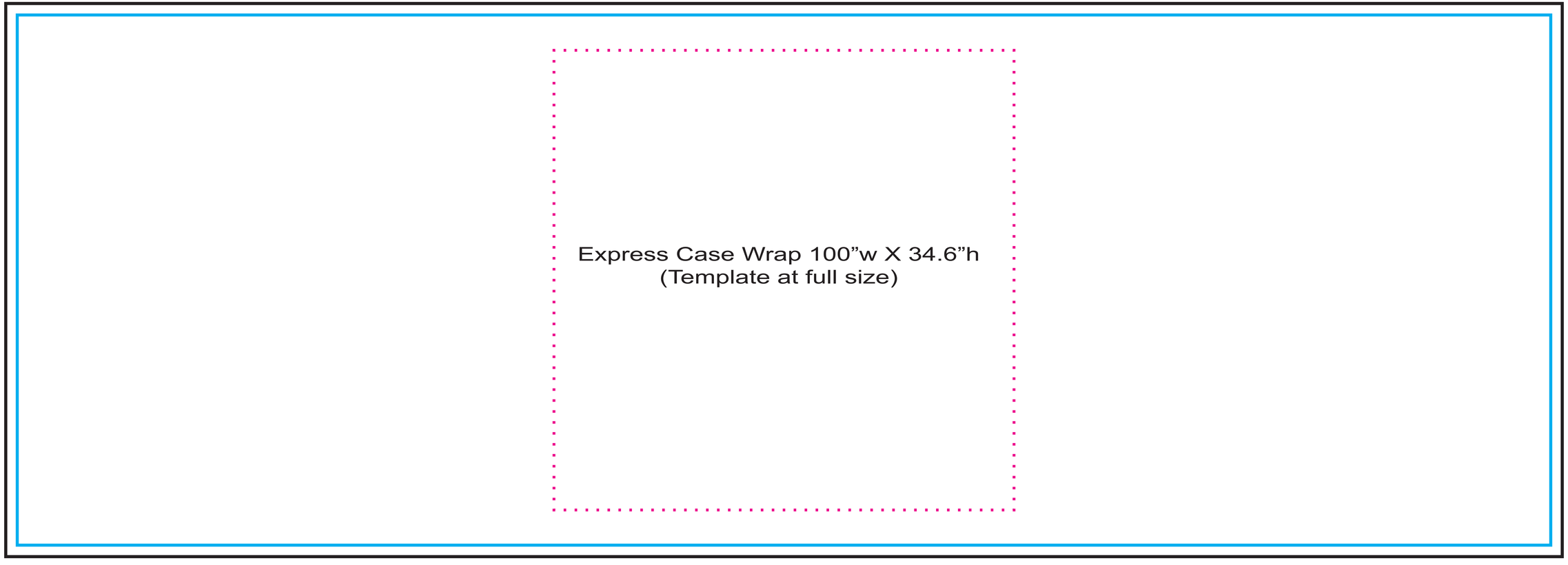

34.6”

SKIN E

Print Size: 101.5”w x 36.1”h
Final Size: 100”w x 34.6”h
Live Area: 30”w x 30”w centered