vibe

Vibe Kit 02

Foreground:
Total graphic area: 112.75"w X 95.6"h
Total visual opening: 108.75"w X 91.6"h
See visual for specifics curves & dimension

Background:
Total graphic area: 118"w X 96"h
Total visual opening: 114"w X 92"h

Top Left Header:
Total graphic area: 49.984"w X 22.149"h
Total visual area: 48.984"w X 21.149"h

Top Right Header:
Total graphic area: 39.125"w X 13.2938"h
Total visual area: 38.125"w X 12.2938"h

Side Top Wing:
Total graphic area: 44.2"w X 12.881"h
Total visual area: 43.2"w X 11.881"h

Side Bottom Wing:
Total graphic area: 43.782"w X 12.881"h
Total visual area: 42.782"w X 11.881"h

See visual for specifics curves & dimension

Counter will be constructed & finished with a laminate. Please consider placement when design your graphic elements. Size and placement on template represents acutal size.

Counter size is 47"w X 39.878"h

Please be sure to include the 2" bleed around the perimeter to compensate for the finishing of large graphics. Do not design any critical elements (text, logos, etc.) within 2" of the edge (see dotted lines).

This template displays the whole pulse kit 2 structure for reference of counter and overlapping elements. Please save final artwork files with proper bleeds in the individual templates.

General Artwork Guidelines
- cmyk color mode
- do not embed images, supply them
- resolution must be 100-120 ppi
- all fonts must be created to outlines

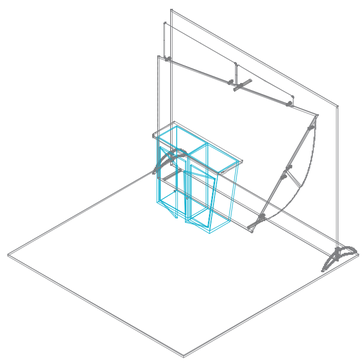

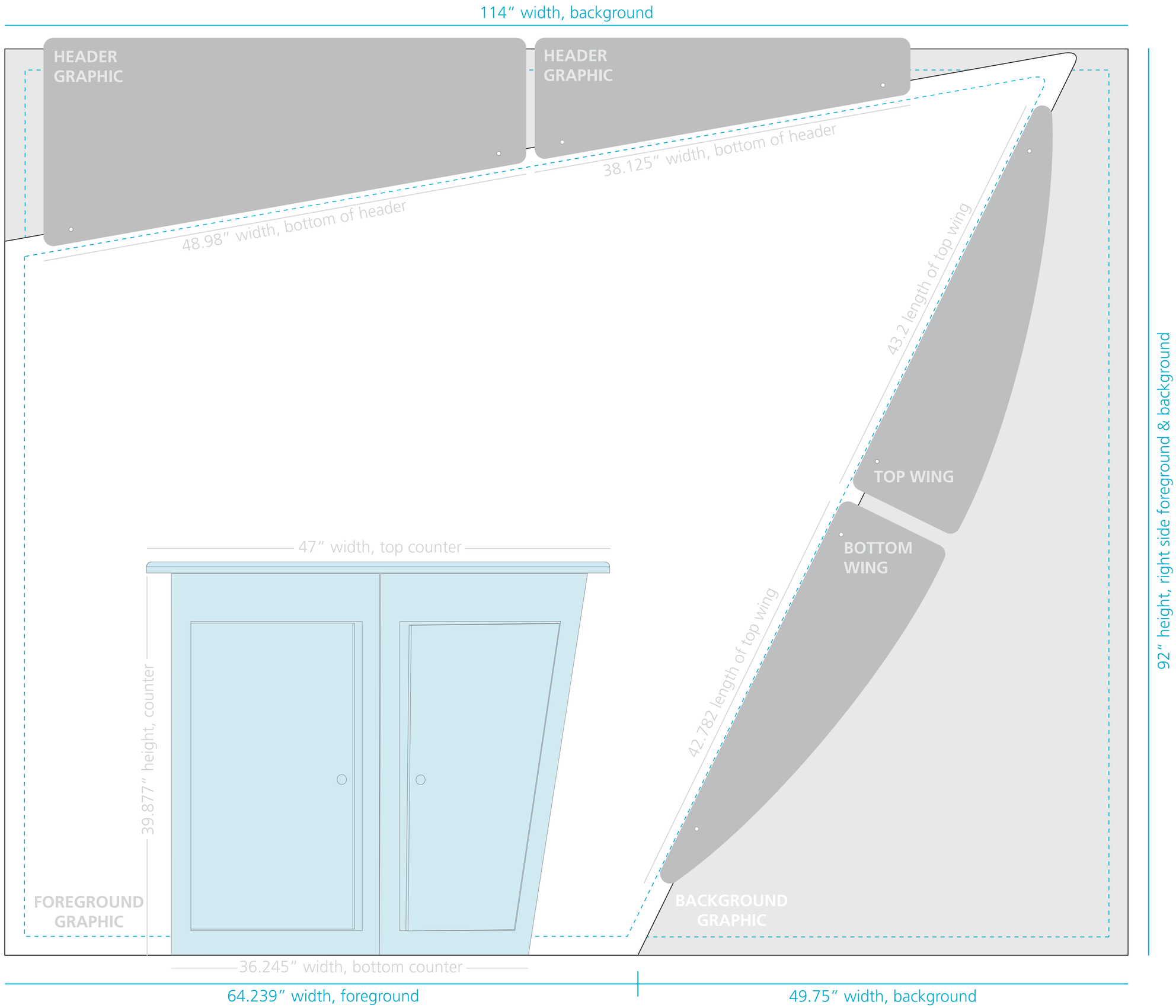

REMINDER: This template is only to view obstructions & layers. Please do not design final artwork in this template. See separate files for final layout.